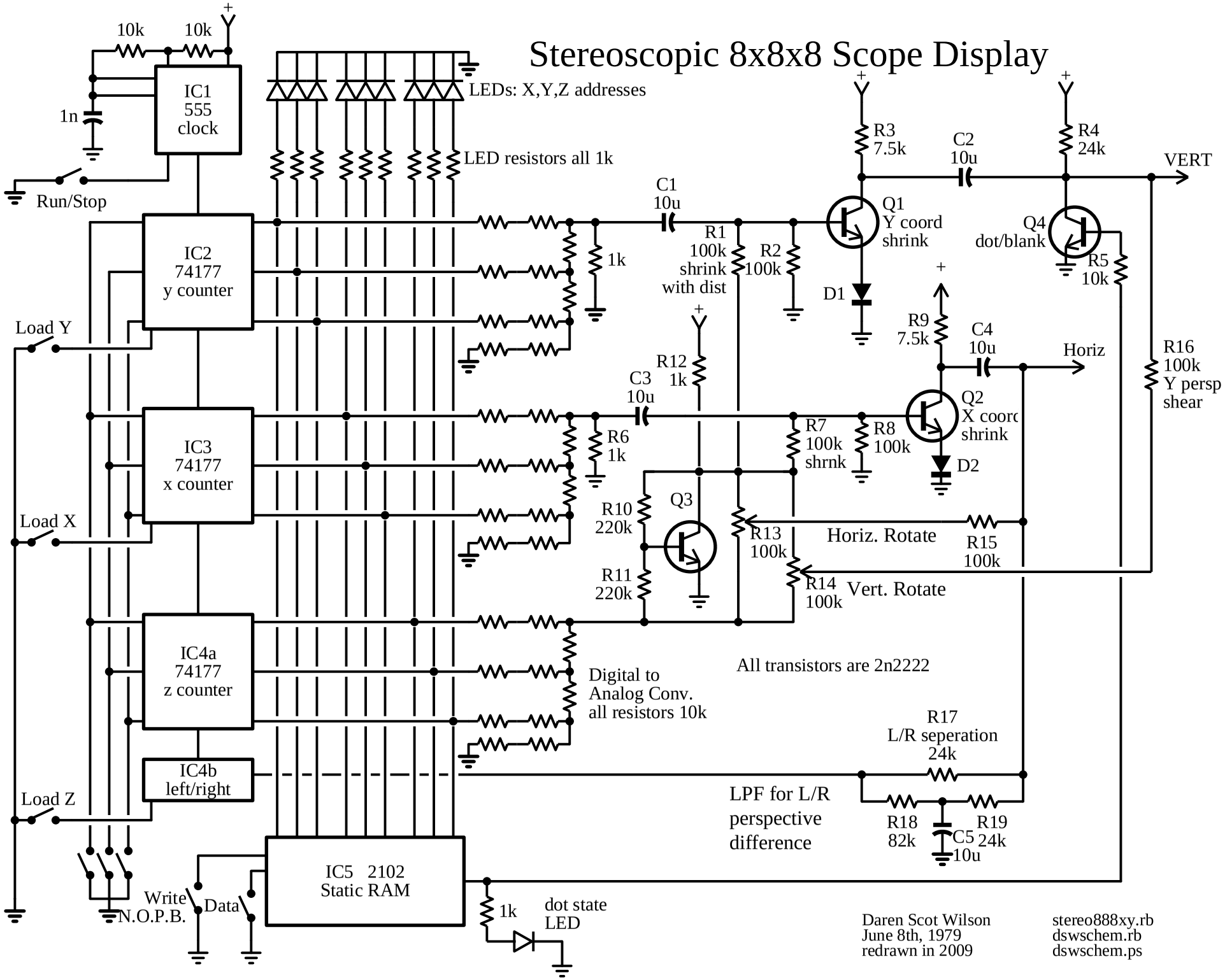# Stereoscopic 8x8x8 Scope Display